EDI as Integration Proxy for External API Communication

Date: 05/20/2022

Status

Proposed

Context

Currently eviCore has been receiving a lot of requests from Insurance Carrier(Payor) to use their real-time API for Member Lookup, Member eligibility, Provider Lookup, Provider eligibility, and others. As the adoption of API increases, it becomes important to have an API integration with external system

Decision Drivers

1. There should be minimal change so that not all the consumer applications need to change
2. It should be highly maintainable
3. It should be decoupled so that different components and systems can evolve independently
4. Software quality attributes to consider: Security, Adaptability, Auditability, Reliability, Availability, Maintainability

Considered Options

EDI as Integration Proxy uses a plugin architecture and is central to all the options and it has some Pros and Cons around it which everyone needs to be aware of

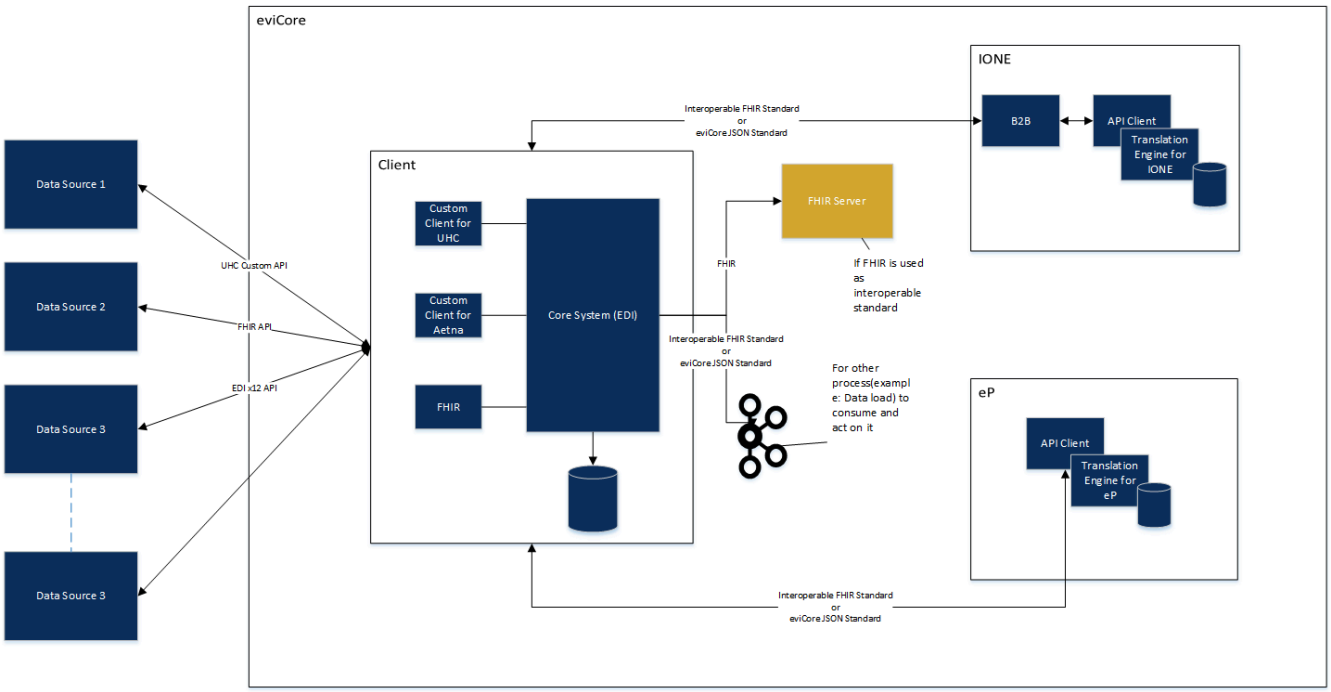

Pros:

- EDI layer adds an abstraction with interoperable data standards that allow the different applications to evolve independently and has a very high agility
- Each application can define its own methods on how to process the data
- Easy to maintain and configure per client-specific implementation
- Security is abstracted from end-user applications like IONE, eP, etc.
- Easy to add security governance
- Easy to audit
- EDI plugin architecture helps to add a new client API or new data format exchange without affecting end-user applications

Cons

- There can be a latency issue as there are multiple network hops
- Overall scalability can be a limitation and it needs to be addressed at plugin-level
- Complex implementation as it requires thoughtful design and contract governance
- EDI becomes a central failure component i.e. if EDI component fails all the end-user application fails

Option 1: EDI as Integration Proxy transforms data to FHIR Standard for internal and external data sharing

Pros

- FHIR is a new interoperable standard and gaining much attraction within Healthcare Industry

- A common standard that can be used within and outside the organization for data exchange thus reducing the implementation time and maintainability
- FHIR Standard can be extended which allows to author and publish a customized, more specific resource definition, by specifying a set of constraints and/or extensions on the base resource.

Cons

- Few resources within the FHIR standard are not mature enough and don't cover a few members, member enrollment, and provider related data entities
- There may be a learning curve to understanding FHIR Standards and their implementation and usage

Option 2: EDI as Integration Proxy transforms data to eviCore JSON Standard for internal and external data sharing

Pros

- eviCore has well established JSON Data Structure that satisfies most of the data entity mapping for external API thus allowing easier integration with different eviCore Systems
- Small learning curve
- Easy to implement

Cons

- As it is eviCore defined internal standard it would require more data transformation when exchanging data outside eviCore (using some interoperability standards) thus increasing implementation and maintainability

Recommended Decision

There are pros and cons to both options so the decision is divided into tactical and strategic decisions. There are a few factors/driving forces that help to make a tactical and strategic decision

Tactical Decision

Factor

- Time to implement and time to market

Decision

Option 2 i.e. EDI as Integration Proxy transforms data to eviCore JSON Standard for internal and external data sharing is a viable tactical decision as there is already an established JSON Standard for Member and Provider data and it has a less implementation time thus allowing to move faster

Strategic Decision

Factor

- Interoperability
- Maintainability

Decision

Option 1 i.e. EDI as Integration Proxy transforms data to FHIR Standard for internal and external data sharing is a viable strategic decision as it allows to have a common interoperability standard that can be used within and outside the organization thus allowing eviCore to integrate with another system with one specific standard and thus reducing the maintenance and in longer run reduce time to implement and time to market.

Decision

<Implementation teams owns the final decision and they should record the final decision here and change the Status to **Accepted**>

Risk

- Some resources within FHIR are not mature enough to cover the data entity which is required for Member, Member Policy, and Provider Data. With unsure of maturity there is a risk of refactoring, reimplementing, and maintaining. Also, within eviCore, there is not much expertise about FHIR and it brings some big learning curve